IF... E...

可调节式电气流量指示器
Adjustable electric flow indicators

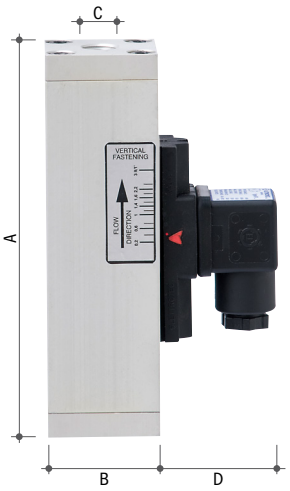

开关容量DC	60 W	*Switching voltage in DC*	*60 W*
开关容量AC	60 VA	*Switching voltage in AC*	*60 VA*
最大工作电压	220 V-50 Hz	*Max. operating voltage*	*220 V-50 Hz*
电流强度DC/AC	0.8 (resistivi)	*Voltage intensity in DC/AC*	*0.8 (resistive)*
击穿电压	300 V	*Breakdown voltage*	*300 V*
打开接触阻抗	4 pF	*Open contact resistance*	*4 pF*
绝缘电阻	10^{10} Ohm	*Insulation resistance*	*10^{10} Ohm*
连接器	PG09	*Connector*	*PG09*
电气保护	IP65	*Electrical protection*	*IP65*
工作温度	-10°C 到 +100°C	*Temperature range*	*-10°C to +100°C*
带氟橡胶垫片	+130°C （需要时）	*FKM seal*	*+130°C (on request)*
紧固	垂直	*Mounting*	*Vertical*
最大倾斜	15°	*Max. inclination*	*15°*
流体入口	下-上	*Fluid inlet*	*Down → Top*
最大流量	140 l/min - H_2O	*Max. flow rate*	*140 LPM - H_2O*
干预带后量	~45% 没定值的左右	*Differential*	*~45% of set value*

流量指示器和开关安装时必须离开含铁部件或墙壁和其他可能的相互作用的磁场至少50毫米

Flow indicators must be mounted at least 50 mm far from iron parts or walls and other possible interacting magnetic field.

如何订购 / *HOW TO ORDER*

IF4 | E | 16 | A | M7 | SC

- **型号 / *Model*** — IF1 - 2 - 3 - 4 - 5 - 6
- **一个电接触 / *One electric contact*** — E
- **最大流量 / *Max. flow rate*** — 1 - 3 - 6 - 16 - 60 - 140
- **本体材料 / *Body material*** — A - O - I
- **弹簧 / *Spring*** — M6 - M7 - M8 - M9 - M10
- **触点 / *Contact*** — A - SC

订购信息 / *ORDERING INFORMATION*

IF...E...	可调节式电气流量指示器		
本体材料	A 铝		
	O 黄铜		
	I 不锈钢		
弹簧	弹簧 M6 粘度可达	14.4	cSt.
	弹簧 M7 粘度可达	39.8	cSt.
	弹簧 M8 粘度可达	70.4	cSt.
	弹簧 M9 粘度可达	119.2	cSt.
	弹簧 M10 粘度可达	205.6	cSt.
触点状态	A 常开触点		
	SC 切换（快动作）单刀双掷		

符合 CE 89/336.
注意 - 订货时，请注明：所检测的流体的种类和粘度，工作温度和工作压力。

IF...E...	*Adjustable electric flow indicators*		
Body material	*A Aluminium*		
	O Brass		
	I Stainless steel		
Spring	*Spring M6 Viscosity up to*	*14.4*	*cSt.*
	Spring M7 Viscosity up to	*39.8*	*cSt.*
	Spring M8 Viscosity up to	*70.4*	*cSt.*
	Spring M9 Viscosity up to	*119.2*	*cSt.*
	Spring M10 Viscosity up to	*205.6*	*cSt.*
Contact type	*A NO normally open*		
	SC Change over (snap action) SPDT		

IN COMPLIANCE WITH CE 89/336.
NOTE - When ordering, please indicate: type and viscosity of the fluid to be checked, working temperature and operating pressure.

一般规格 / *GENERAL SPECIFICATIONS*

型号 *MODEL*	工作范围 L/MIN - H_2O OPERATING RANGE LPM - H_2O	尺寸 / *DIMENSIONS* 毫米 / mm				配置 *EXECUTION*	最大压力 *MAX. PRESSURE* bar	重量 *WEIGHT* 克 / g
		A	B	C	D			
IF1E1/A	0.1 - 1	136	40	G1/4”	40	经过阳极化处理过得铝 *Anodized aluminium*	150	0.70
IF2E3/A	0.2 - 3	136	40	G1/4”	40			0.70
IF3E6/A	1 - 6	136	40	G1/4”	40			0.70
IF4E16/A	2 - 16	167	40	G1/2”	40			0.75
IF5E60/A	5 - 60	190	50	G1”	40			1.30
IF6E140/A	40 - 140	200	70	G1 1/2”	40			2.55
IF1E1/O	0.1 - 1	136	40	G1/4”	40	镀镍黄铜 *Nickel-plated brass*	150	2.55
IF2E3/O	0.2 - 3	136	40	G1/4”	40			1.45
IF3E6/O	1 - 6	136	40	G1/4”	40			1.45
IF4E16/O	2 - 16	167	40	G1/2”	40			1.75
IF5E60/O	5 - 60	190	50	G1”	40			3.05
IF1E1/I	0.1 - 1	136	40	G1/4”	40	美国钢铁学会标准304号不锈钢 *AISI 304 Stainless steel*	150	1.45
IF2E3/I	0.2 - 3	136	40	G1/4”	40			1.45
IF3E6/I	1 - 6	136	40	G1/4”	40			1.45
IF4E16/I	2 - 16	167	40	G1/2”	40			1.75
IF5E60/I	5 - 60	190	50	G1”	40			3.05

Elettrotec保留未经事先通知更改产品技术数据或暂停生产的权利。该流量计和流量指示器触点受到强烈冲击或震动时可能会被损坏。用户有责任对我们的产品是否适合特定应用进行测试，例如，材料的兼容性测试。仅在现场试验中得到证实的使用才会是适当的。该样本中的技术信息基于产品开发过程中的测试和经验值的积累，他们可能并不适用于所有情况。

Elettrotec reserves the right to technical data of change to the products or halt production without prior notice. The flow meter/flow indicator contacts can be damaged when subject to strong shocks or high vibration. It is the responsibility of the user to test the suitability of our products for the particular application, for example, the verification of material compatibility. The use may only be appropriate if proven in field tests. The technical information in this catalogue are based on tests made during product development and based on empirically gathered values. They may not be applicable in all cases.

ELETTROTEC
www.elettrotec.com
E. & O. E. 23-2-2-31

可调节式电气流量指示仪以及带有或者不带有可视指示器的流量指示器IF系例

应用范围

意大利伊莱科流量指示器和流量指示仪通常用于监控线路中流体或者气体的流量，一旦流量强度发生变化，低于设定值时，就会将警报信号发送到远程的控制面板上。
除此之外，该系列的流量指示仪以及流量指示器还可用于水、油与气体等循环设备中，也可用于冷却系统、热泵、加热器、焊接机、变压器、热交换器、压缩机以及化工、制药与食品等行业中。

工作原理

可调节式电气与带有可视指示器的流量指示器都是由下列元部件所组成的：一个坚固结实的主体、2个连接法兰、1个永磁节流门、一个带有刻度尺的硼硅酸硬玻璃管、一个节流门导向管，其流量截面是可变的、密封圈、一个带有磁性触点的游标以及一个用于电气连接的接插件。
液体或者气体从垂直固定的流量指示器的底部向上流动进入，沿着截面积可以随着流量而变化的管子将节流门向上推动，将其设定在某一流量值，该读数可以从硼硅酸硬玻璃管子上的红色刻度线所标出的刻度尺上读取。这样，就可以读取线路中瞬时流量值。
浸没在液体中的节流门可以自由地移动，没有机械摩擦。由于在内部放置磁铁，磁铁产生磁场，在磁场的作用下，节流门就激活了电气警报触点；活动游标配备有基准刻度，通过游标可以把触点定位在要进行控制的流量上，流量在侧面的标牌上标示出。游标应该用位于接插件下面的销子来锁定其运动，所用液体应没有任何杂质。

特性

由于运动中的部件完全没有摩擦，所有运行绝对安全。
固定干预滞后量最小在20%左右。
在整个刻度上都可以调节干预点。
由于结构紧凑、结实，所以流量指示仪和流量指示器都很坚固耐用。

元部件

主体与连接法兰盘都是用经过阳极化处理过的轻质合金，镀镍黄铜以及美国钢铁学会标准304号不锈钢制成的，计量管子和节流门都是用镀铬黄铜或者美国钢铁学会标准304号不锈钢制成的，并且带有永久磁铁，硼硅酸硬玻璃管子有刻度尺，密封圈是由丁腈橡胶，氟橡胶或者三元已丙橡胶制成。根据客户的需求，流量指示器还可以用美国钢铁学会标准316号不锈钢来制作。

对应于IF ... V-VE-E流量指示器和开关的水/空气流量转换表

型号	水 LPM	空气 Nm3/h
IF1...	0.1 - 01	0.2 - 2
IF2...	0.2 - 03	0.35 - 5
IF3...	1 - 06	2 - 10
IF4...	2 - 16	3.5 - 29
IF5...	5 - 60	10 - 110

用于比水更粘的液体的弹簧

弹簧 M6	粘度至14/4 cSt.
弹簧 M7	粘度至39/8 cSt.
弹簧 M8	粘度至70/4 cSt.
弹簧 M9	粘度至119/2 cSt.
弹簧 M10	粘度至205/6 cSt.

流量指示器以及流量指示器在安装时必须离内墙或者钢铁物体至少50毫米的地方，要远离可能引起干扰的磁场。

注意：任何转换电压和电流之和不能超过技术数据中所指出的额定功率。

ADJUSTABLE ELECTRIC FLOW METERS AND INDICATORS WITH OR WITHOUT VISUAL INDICATION TYPE IF

USE

The Elettrotec flow meters and indicators are generally used to monitor the flow of a fluid or a gas in a circuit and have a simple reading of the flow or, when equipped with contact, send an electric alarm signal to a remote board in case of flow decreasing under the set value.
They are normally used in circulation plants, fuel and water outlets, oil and gas systems as well as in cooling circuits, heat pumps, welding machines, heaters, transformers, heat exchangers, compressors, food, chemical and pharmaceutical industry.

OPERATION

The electric and adjustable flow indicators with visual indication have been designed with a rugged body, two connection flanges, a shutter with permanent magnet, a Pirex tube marked with a graduated scale, a guide tube of the shutter with variable flow rate areas, seals, a cursor with magnetic contacts and a connector for circuitry.
Liquids or gases flow upwards from the bottom of the device, fixed in the upright position, pushing the shutter along the
guide tube with variable areas and setting it at a flow rate value readable on the graduated scale marked on the glass tube by the red index line. In this way it is possible to read the instant flow in the circuit.
The shutter, plunged in the fluid, can freely move without mechanical friction and, thanks to the magnetic field produced by the magnet housed inside, let operate the electric alarm contact. By means of the movable cursor, equipped with a reference index, the contact can be placed by the flow rate to be checked, shown on the label at the side.
The cursor movement must be fixed by turning the dowel under the connector.
Use fluids having no kind of impurity.

FEATURES

Highest operation safety thanks to the frictionless parts in movement.
Adjustment of the intervention point at any value indicated on the scale.
Particular rugged construction.
Not affected by fluid pressure.

COMPONENTS

Anodized light alloy, nickel-plated brass or 304 stainless steel body and flange, chromium-plated brass or 304 stainless steel tube and shutter with permanent magnet, Pirex glass tube with graduated scale, nitrile rubber, FKM or EPDM seal gaskets.

CONVERSION TABLE OF WATER/AIR FLOW RATE RELATIVE TO IF...V-VE-E FLOW METERS AND INDICATORS

Model	*Water LPM*	*Air Nm3/h*
IF1...	*0.1 - 01*	*0.2 - 2*
IF2...	*0.2 - 03*	*0.35 - 5*
IF3...	*1 - 06*	*2 - 10*
IF4...	*2 - 16*	*3.5 - 29*
IF5...	*5 - 60*	*10 - 110*

SPRINGS TO BE USED WITH FLUIDS MORE VISCOUS THAN WATER

Spring M6	*Viscosity up to*	*14.4 cSt.*
Spring M7	*Viscosity up to*	*39.8 cSt.*
Spring M8	*Viscosity up to*	*70.4 cSt.*
Spring M9	*Viscosity up to*	*119.2 cSt.*
Spring M10	*Viscosity up to*	*205.6 cSt.*

FLOW METERS AND INDICATORS MUST BE MOUNTED AT LEAST 50mm FAR FROM IRON PARTS OR WALLS AND OTHER POSSIBLE INTERACTING MAGNETIC FIELD.
WARNING: any combination of the switching voltage and current must not exceed the given rated power.

可调节式电气流量指示器IFE

应用范围
意大利伊莱科流量指示器通常用于监控线路中流体的流量，一旦流量强度发生变化，低于设定值时，就会将开-关电气警报信号发送到远程 的控制面板上。
除此之外，该系列的流量指示器还可用于水与油等循环设备中，也可用于冷却系统、热泵、加热器、焊接机、变压器、热交换器、压缩机以及化工、制药与食品等行业中。

工作原理
可调节式电气与带有可视指示器的流量指示器都是由下列元部件所组成的：一个坚固结实的主体、数个连接接头、1个流量截面可变的永磁节流门、数个密封圈、一个带有磁性触点的游标以改一个用于电气连接的接插件。
液体或者气体从垂直固定的流量指示器的底部向上流动进入，沿着截面积可以随着流量而变化的管子将节流门向上推动，将其设定在某一流量值，该读数可以从硼硅酸硬玻璃管子上的红色刻度线所标出的刻度尺上读取。这样，就可以读取线路中瞬时流量值。
节流门浸没在液体中，可以自由地移动，没有机械摩擦，由于在内部放置磁铁，磁铁产生磁场，在磁场的作用下，节流门就激活了位于带有基准刻度的活动游标中的电气警报触点；通过游标可以把触点定位在要进行控制的流量上，流量在侧面的标牌上标示出。游标应该用位　　于接插件下面的销子来锁定其运动，所用液体应没有任何杂质。

特性
由于运动中的部件完全没有摩擦，所有运行绝对安全。
在整个刻度上都可以调节干预点。由于结构紧凑、结实，所以流量指示器都很坚固耐用。对于流体的压力不敏感。

元部件
主体与接头都是用镀镍黄铜制成的、节流门是用镀铬黄铜制成的，并且带有永久磁铁，密封圈是由丁腈橡胶制成的，触点游标、连接用接插件以改各自的固定螺丝都是用热固性塑料制成的。

安装
IF...E系列流量指示器在安装时要远离磁场并且要避免将其固定在磁铁内墙上，因为这样会去掉节流门内部的磁铁的磁性，从而影响其正常的功能。流量指示器适宜于垂直固定，让流体从下向上流动。
要进行监控的流体应该没有任何可能卡住节流门运动的悬浮杂质。如果要调节电气流量报警触点，那么可以把触点游标向上移动，然后再慢慢地降下来，一直降到使得位于内部的簧片触点关闭。最后再使用专门的固定销将其锁定。

技术信息

簧片触点的防护线路
技术数据表中指出的有关额定电流与额定电压的数值指的是电阻负荷载。但是应该经常检查感应负荷载或者容量负荷载或者应该开一开灯泡。
在这种情况下，必须要保护簧片触点，使之免受电压或者电流峰值的冲击。

1）感应负荷载
在直流电的线路中触点防护相对比较容易。按照图1所示，应该将一个半导体二极管与负荷载并连连接。极性连接要确保在正常工作电压下两极管是不通的，而在极性转换的情况下则总是产生短路。在感应负荷载下，当交流电输入感应负荷载转换时就不能使用二极管，必须 使用电弧抑制装置。如图2所示，通常与转换开关连接是采用RC并联，因此与负荷载是串联的。电弧抑制装置的尺寸大小由图3中的曲线图所决定的。

2）容量负荷载与电阻负荷载
与感应负荷载的情况正相反，借助于容量负荷载和灯泡，可以加大放电，否则可能会引起突然的损坏，甚至于触点熔接。当充电的电容或者线路上的电容器转换时，会发生突然的放电，其强度取决于负荷载的长度和容量。如图4所示，采用电阻器与电容器串联的方式可以限制峰值放电电流。电阻器的大小取决于特定电路提供的不同可能性。
无论如何，电阻器应该是最有可能将电流放电限制在可接受值范围以内，电容充电也是这样的。　可以使用如图5所示的线路，配备R1和R2，来防止电容高电流放电。

在前面10毫秒工作时间内，钨极灯将额定电流提高了5至15倍。增加用于限制电流的串联电阻，可以将高放电限制在可接受值的范围内。　另外一种办法就是将电阻号转换开关并联，这样就使得灯泡的灯丝被预热，从而打开电灯时灯丝就不会是白炽的。这两种防护方法都意味着电源的损耗。

ADJUSTABLE ELECTRIC FLOW INDICATORS IFE

USE *The IFE flow indicators are generally used to monitor the flow rate of a fluid in a circuit and send an electric ON-OFF alarm signal to a remote board in case of flow decreasing under the set value. These flow indicators are normally used in circulation plants, fuel and water outlets, oil systems as well as in cooling circuits, heat pumps, welding machines, heaters, transformers, heat exchagers, compressors, food, chemical and pharmaceutical industry.*

OPERATION *These electric and adjustable flow indicators have been designed with a rugged body, connections, a shutter with permanent magnet and variable flow areas, seals, a cursor with magnetic contacts and a connector for circuitry. The shutter, plunged in the fluid, can freely move without mechanical friction and, thanks to the magnetic field produced by the magnet housed inside, let operate the electric alarm contact. By means of the movable cursor, equipped with a reference index, the contact can be placed by the flow rate value to be checked, shown on the label at the side. The cursor movement must be fixed by turning the dowel under the connector. Use fluids having no kind of impurity.*

FEATURES *Highest operating safety due to frictionless parts in movement. Adjustment of the intervention point at any value indicated on the scale. Particular rugged construction. Not affected by fluid pressure.*

COMPONENTS *Nickel-plated brass body and connections, chromium-plated brass shutter with permanent magnet, nitrile rubber gaskets, switch housing cursor, connector and screws in thermoplastic material.*

INSTALLATION *Mount the IF...E flow indicator far from any interacting magnetic fields and avoid to fix it against iron walls that could degauss the magnet housed inside the shutter and affect the correct working. It is advisable to fix the device in vertical position to let the fluid flow upwards. The fluid to be monitored must be absolutely free from any impurity that could prevent the shutter working correctly. To adjust the electric alarm contact shift the cursor upwards and then slowly bring it down to let the reed contact housed inside close. Then secure it with the proper fixing dowel.*

TECHNICAL INFORMATION

PROTECTIVE CIRCUITS FOR REED CONTACTS *The current and voltage switch rating given in the technical data refer to pure resistive loads. However, inductive or capacity loads are often to be checked or lamps are to be switched. In this case it is necessary to protect the reed contacts against peaks in voltage or current.*

1) Inductive loads *The contact protection is relatively easy with direct current. A semiconductor diode is to be connected in parallel to the load, as indicated in picture 1 (next page). Polarities must be connected in a way the diode would simply jam under normal operating voltage and always short-circuit the opposing voltage that occurs with the opening of the switch. When inductive loads, fed with alternating current, are switch-ed, it is not to be used a diode but an arc-suppression unit. An RC link connected in parallel to the switch, and therefore in series with the load, is usually applied, see picture 2 (next page). The arc-suppression size can be taken from a chart, as from picture 3 (next page).*

2) Capacity loads and lamp switching-on *Contrary to inductive loads, high current inrushes occur with capacitive loads or switched-on lamps, and that may lead to early switch failure or even to welding of contacts. When charged capacitors or cable capacitors are switched, a sudden discharge occurs, the intensity of which depends on the capacity and length of the connecting cables. A resistor in series with the capacitor limits the current peaks or discharges, as shown in picture 4 (next page). The size of the resistor depends on the different possibilities offered by a particular circuit. In any case the resistor should be the biggest possible to limit the current discharge within accept-able values. The same applies also to charging of capacitors. Protection against high current discharges from capacitors should be provided by means of the circuit R1 or R2 or both, as shown in picture 5 (next page).*

Tungsten lamps increase from 5 to 15 times the rated current during their first ten milliseconds of working. These high current inrushes can be limited to an acceptable value connecting in series current-limiting resistance or connecting in parallel to the switch a resistance, so that the lamp filaments would be preheated just to the point they would not become incandescent when turned-on. Both protecting solutions imply a power loss.

决定感应负荷载触点的电弧抑制曲线图
Graph for determining the contact arc suppression for inductive loads.

举例 1:
I = 0.1 A
VL = 220 V
C = 0.001 µF
R = 340 欧姆

Example 1:
I = 0.1 A
VL = 220 V
C = 0.001 µF
R = 340 Ω

举例 2:
当启动电流是临界状态时，电阻应该用较下面的曲线图来决定，例如：启动电流是0.5AR_{min}=400欧姆

Example 2:
When the inrush current is critical, the resistance should be determined with the lower graph, for example inrush current 0.5 A R_{rm}=400 Ω

图3
Fig. 3

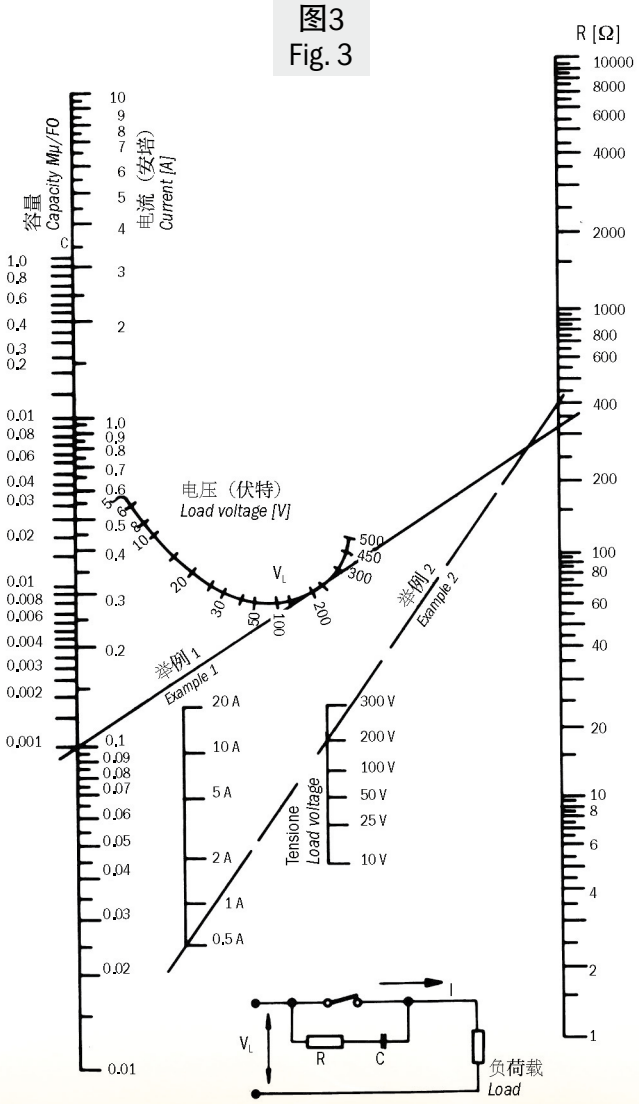

RC连接的电弧抑制装置
Arc suppressor with RC link

簧片触点的防护线路
Protective circuits for Reed contacts

感应负荷载
Inductive loads

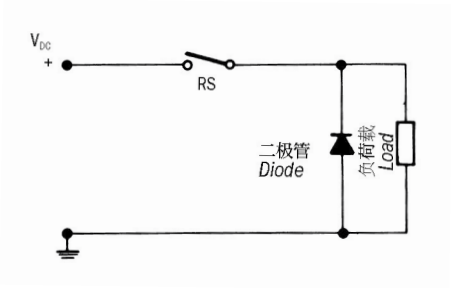

图1
Fig. 1
对于感应负荷载，用半导体二极管做直流电防护
Direct current protection with semiconductor diode for inductive loads.

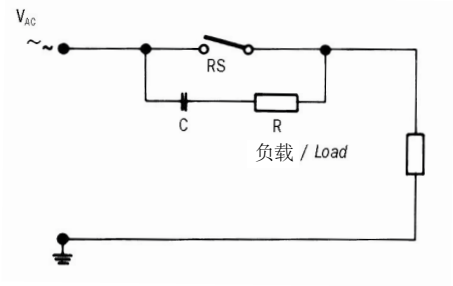

图2
Fig. 2
对于感应负荷载，用RC连接方式做交流电防护
Alternating current protection with RC link for inductive load.

容量负荷载与灯泡
Capacitive Loads and Lamps

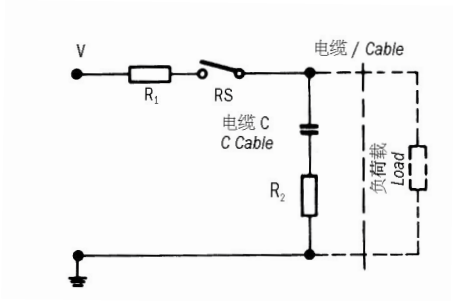

图4
Fig. 4

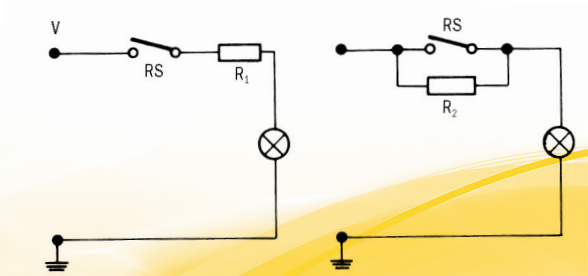

图5
Fig. 5
灯泡和电阻并联或者与转换开关串联的线路
Lamp load resistance in parallel or in series with switch.